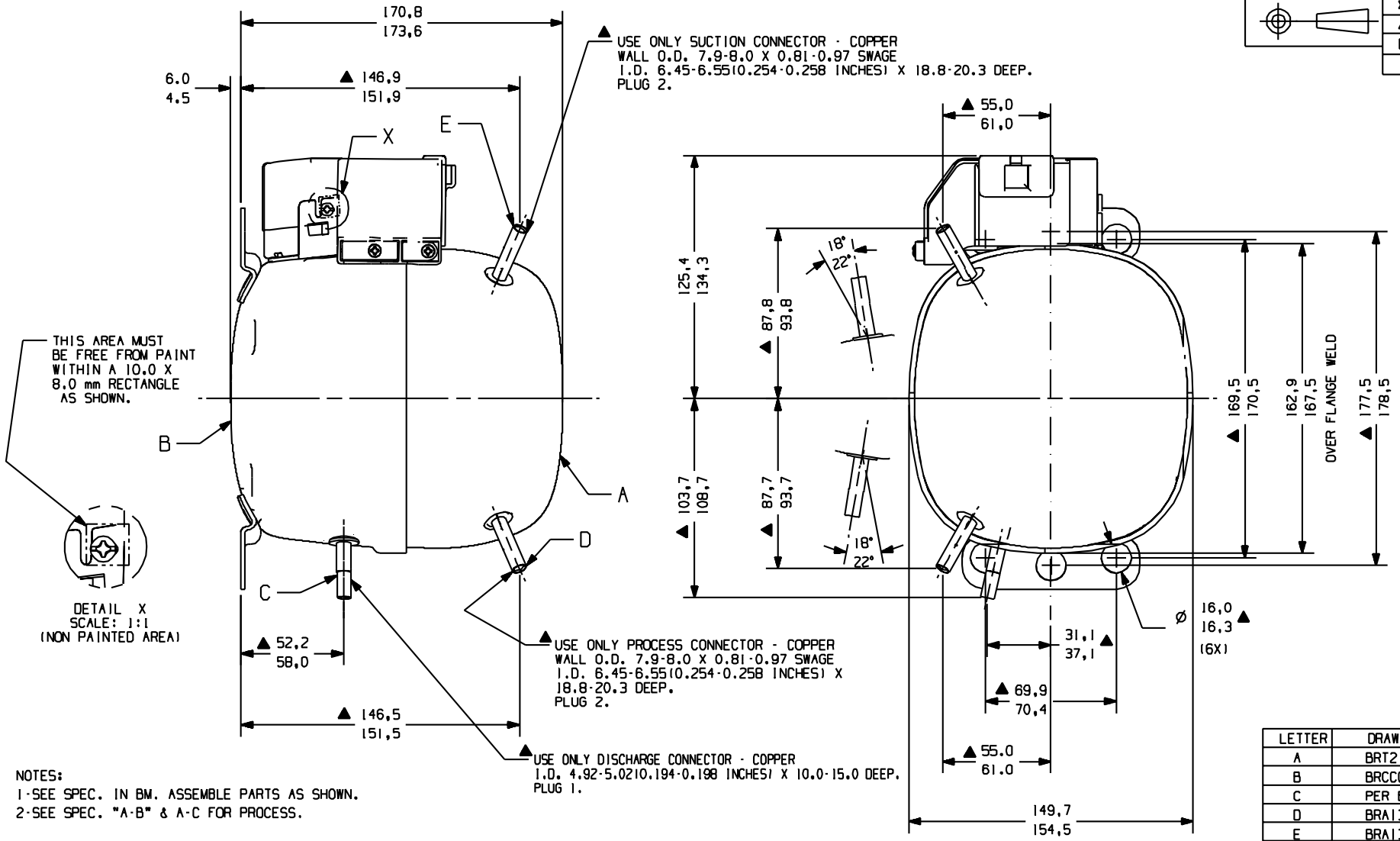

THIRD ANGLE PROJECTION	Q. A. SYMBOLS
	: CATEGORY I
	: CATEGORY II
	: CATEGORY III
	: CATEGORY IV

NOTES:
1-SEE SPEC. IN BM. ASSEMBLE PARTS AS SHOWN.
2-SEE SPEC. "A-B" & A-C FOR PROCESS.

LETTER	DRAWING NR.
A	BRT2165
B	BRCCC1270
C	PER B.M.
D	BRA134002-2
E	BRA134002-2

EC T. M.		DATE
IN PROCESS		
-		
LT	LC	CHANGE

THIS DRAWING OR PRINT (I) IS THE PROPERTY OF TECUMSEH DO BRASIL LTDA. AND CONTAINS PROPRIETARY AND CONFIDENTIAL INFORMATION BELONGING TO TECUMSEH DO BRASIL. (II) IS MADE AVAILABLE TO THE RECIPIENT ON THE EXPRESS AND SPECIFIC CONDITION THAT NEITHER IT NOR THE INFORMATION CONTAINED THEREON OR DISCLOSED OR MADE AVAILABLE TO OTHERS WITHOUT THE EXPRESS AND SPECIFIC WRITTEN CONSENT OF TECUMSEH DO BRASIL AND THAT SUCH INFORMATION ONLY AS EXPRESSLY AND SPECIFICALLY APPROVED IN WRITING BY TECUMSEH DO BRASIL AND NOT OTHERWISE. (III) SHALL NOT BE COPIED OR TO ANY EXTENT WITHOUT TECUMSEH DO BRASIL PRIOR EXPRESS AND SPECIFIC WRITTEN CONSENT AND (IV) SHALL BE RETURNED BY THE RECIPIENT LATTER'S REQUEST PROMPTLY AFTER SUCH REQUEST IS MADE.

DO NOT SCALE THIS DRAWING. ALL FERROUS MATERIALS MUST BE MAGNETIZED AS RECEIVED OR AT COMPRESSOR ASSEMBLY.

TECUMSEH DO BRASIL LTDA.

NAME			PART NO.
SALES COMPRESSOR			BRDCTH304
DWN. A.MARCOS 30/01/07	CK. TATIANE	APR. WALTER CORREA	SCALE 1:2
REF.			PAGE 1/1 AZ TH